TEAR SHEET

Bryant Large Wrapped Billiard
Item # TOB 5586HAB/CHC-L

Designer: Thomas O'Brien

O/A Height: 59.25"
Fixture Height: 32.75"
Min. Custom Height: 39.75"
Width: 64.25" x 16"
Canopy: 4.5" x 60" Rectangle
Finishes: BZ/SDL, HAB/CHC, PN/NAT
Shade Treatments: L
Shade Details: 10.5" x 12" x 7.5"
Socket: 3 - E26 Keyless
Wattage: 3 - 15 LED A19
Weight: 24 Pounds

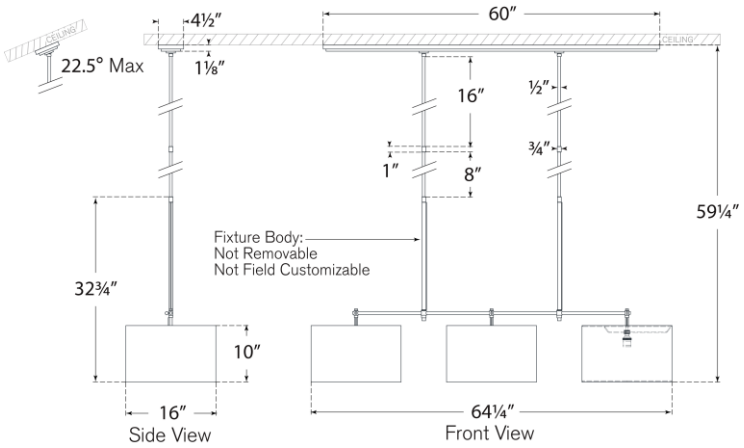

VISUAL COMFORT & CO.